EUHOMY

Car Refrigerator

Instruction Manual

SKU: CFB-35-AZ-HM
CFB-50-AZ-HM

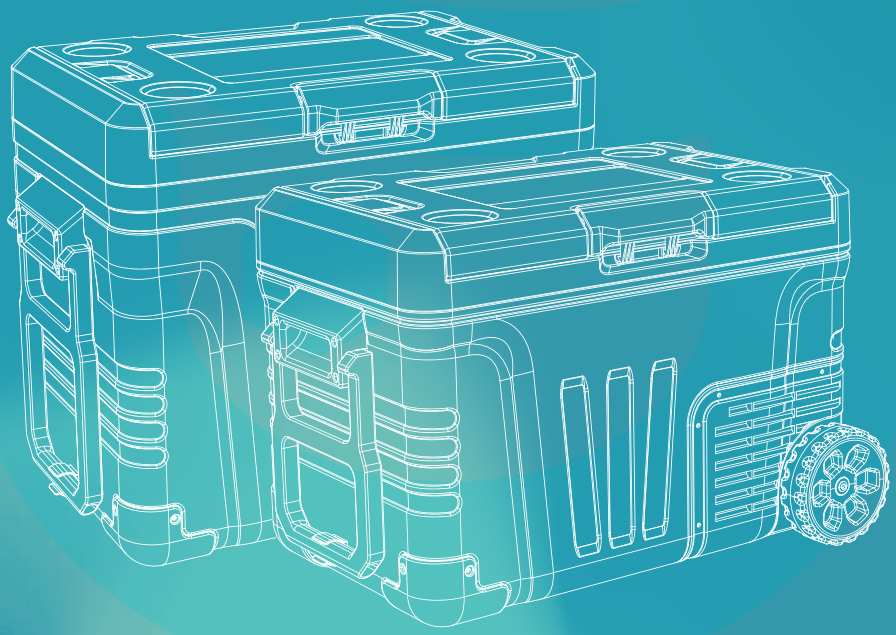

To ensure your safety and the proper use of this appliance, please read the following instructions completely before operating this appliance.

Email: support@euhomy.com

Facebook: @Euhomy.Official

Congratulations

Dear Customer:

Welcome to the Euhomy family. Thank you for purchasing one of our products.

Our goal is to provide you with superior service. If there is anything missing from or wrong with your order, or if you have any questions about using our ice maker, PLEASE contact us.

Email: support@euhomy.com
Facebook: @Euhomy.Official

The Euhomy team is available 24/7 to address your questions, comments, and concerns. Your satisfaction is our ultimate goal. We want to make everything right so you'll share your positive experience with other shoppers on Amazon.

If you experience any problems, please send an email to support@euhomy.com.

Our mission:
* To be the most trusted appliance brand.
* To create practical, compact appliances that better your life.

Be sure to register at

www.euhomy.com/register

for updates, warranty, and other relevant information.

Content

1. Product features..... 02
2. Tips for energy savings..... 02
3. Important safety instructions 03
4. Disposal of your unit 04
5. Recommended temperature storage items..... 05
6. Parts list 05
7. Specifications 06
8. How to run the unit..... 07
   - Warning
   - Starting the unit
   - Operation panel function
   - Operating the unit
   - Start the unit
   - Adjust the temperature setting
   - Advanced parameter setting
   - Error code display
   - Defrosting your unit
   - Normal operating sounds and functions
   - When not using your unit for a long period
   - Cleaning your unit
9. Troubleshooting..... 15
10. Warranty..... 16

Product Features

Cooled by a high-efficiency DC compressor, with high reliability, long life, high energy efficiency, and quick cooling.

Fresh and freeze modes are convertible; foaming door, camping/environmental look, elegant design, easy operation.

Pull-rod and large-wheel design, suitable for outdoor flooring.

LED lighting in the cooler compartment, clear visibility of contents.

Bottom water drain plug to easily drain the condensate water.

Left and right-side reversible door design to change door opening direction.

Vehicle, for in-house or outdoor use, can be either operated from DC12V/24V vehicle cigarette lighter or from AC/DC adapter supplied by AC electric mains, also operated from a DC12V storage battery or from a solar panel cell through an adapted voltage regulator.

Set with compressor time-delay protection function.

Memory function when powered off.

Three-level battery monitor to protect the vehicle battery.

Wide temperature setting range: From minus 20℃ to above 20℃

Tips For Energy Savings

Keep the unit doors closed as much as possible, particularly in warm/humid conditions.

Maintain adequate ventilation around the back and sides of the unit and avoid direct sunlight.

Allow warm foods to cool to room temperature before putting them in the unit.

Do not open the cooling device more often than necessary.

Excessive ice build-up will increase energy consumption. Defrost the unit when ice/frost is ¼" thick.

I Important Safety Instructions

Before you use your vehicle refrigerator and freezer unit, please read this owner's manual carefully.

Use this appliance only for its intended purpose as described in this owner's manual.

-suitable for camping use;

-this appliance shall not be exposed to rain.

-WARNING:

This appliance is intended to be used for household and similar applications such as

– staff kitchen areas in shops, offices, and other working environments;

– farms and by clients in hotels, motels, and other residential-type environments;

– bed and breakfast environments;

– catering and similar non-retail applications.

Do not use an extension cord as this can negatively affect the performance of the unit. If you must use an extension cord, use 18AWG minimum size and rated no less than 1875 watts.

When transporting the refrigerator, keep the unit in an upright position. Do not tilt the appliance beyond 45° or place the unit upside down. Do not tip over.

Do not touch the cooled surfaces while the appliance is in operation, especially not with wet hands as skin may stick to the cold surfaces.

It is recommended that the refrigerator be positioned away from any combustible sources such as gas, petrol, alcohol, lacquer, or oils. The aforementioned objects should not be stored in the refrigerator under any circumstances.

If the unit fails to cool properly, dispose of spoiled food as needed.

Unplug your unit before cleaning or making any repairs. NOTE: If for any reason this appliance requires service, we strongly recommend that a certified technician perform the service. Repairs made by non-qualified personnel will void the warranty.

Do not defrost the appliance with another electric device (hair dryer, etc.), and never scrape the ice or frost layer with sharp tools. Warning: Do not damage the refrigerant circuit.

This appliance is not intended for use by persons (including children) with reduced physical, sensory, or mental capabilities, or lack of experience and knowledge, unless they have gotten supervision or instruction in the use of the appliance, by a person responsible for their safety.

Children should be supervised to ensure that they do not play with the appliance.

Do not run cord over carpeting or other heat insulators. Do not cover the cord. Keep cord away from traffic areas and do not submerge in water. If the supply cord is damaged, it must be replaced by the manufacturer or its service agent or a similarly qualified person in order to avoid a hazard. Repair or replace immediately all electric service cords that have become frayed or otherwise damaged. Do not use a cord that shows cracks or abrasion damage along its length, at the plug or at the connector end.

WARNING: Keep ventilation openings, in the appliance enclosure or in the built-in structure, clear of obstruction.

WARNING: Do not use a mechanical device or other means to accelerate defrosting, other than those recommended by the manufacturer.

WARNING: Do not damage the refrigerant circuit.

WARNING: Do not use any other electrical appliances inside the food storage compartments of the appliance, unless they are of the type recommended by the manufacturer.

Do not operate your appliance in the presence of explosive fumes.

WARNING--Do not use a flame or fire near the unit.

CAUTION--Risk of Fire or Explosion. Dispose Of Property in Accordance with Federal and Local Regulations. Flammable Foaming Material Used.

Disposal of your unit

Warning: Risk of fire / flammable materials

Please adhere to local regulations regarding the disposal of the appliance.
Before disposing of the appliance, remove the doors to prevent children being trapped.

DANGER: Risk of child entrapment. Before you throw away your old refrigerator or freezer:

Take off the doors.

Leave the shelves in place so that children may not easily climb inside.

Recommended temperature of stored items

1.Fruits and vegetables: 5℃（41℉）～10℃（50℉）

2.Fast food and pastries: -3℃（27℉）～4℃（39℉）

3.Seafood, aquatic product categories: -11℃（12℉）～-4℃（25℉）

4.Frozen meat: -18℃（0℉）～-12℃（10℉）

Parts List

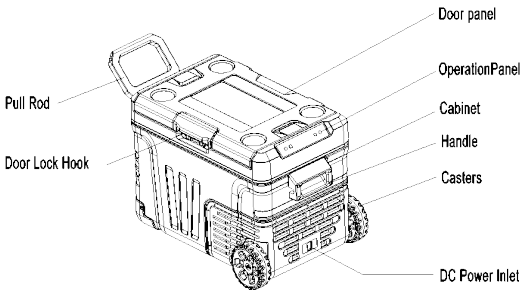

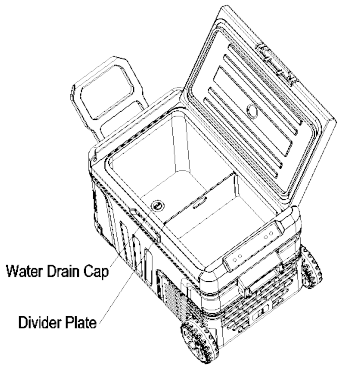

EUHOMY
Live the cool life

Specifications

Model No.	CFB-35-AZ-HM			CFB-50-AZ-HM		
Capacity	35L			50L		
Electrical Safety Class	III			III		
Power Supply	100-240V~ 50/60Hz 1Ph(by AC/DC adapter)	DC 12V⎓ (by Car Cigarette lighter)	DC24V ⎓ (by Car Cigarette lighter)	100-240V~ 50/60Hz 1Ph(by AC/DC adapter)	DC 12V⎓ (by Car Cigarette lighter)	DC24V ⎓ (by Car Cigarette lighter)
Electrical Rating	0.7-1.6A	6A	3.5A	0.7-1.6A	6.5A	4.0A
Refrigerant	R134a 2.19Oz/62g			R134a 2.72Oz/77g		
Foaming agent	Cyclopentane			Cyclopentane		
Net Weight	33.1LBS			35.7LBS		
Product size	654*441*433mm			654*441*531mm		

WARNING!

Do not operate the cooling device if it is visibly damaged.
If the power cord of the cigarette lighter or AC/DC adapter is damaged, it must be replaced by customer service in order to prevent safety hazards.
Never pull the power cord to disconnect the unit from an outlet. Grasp the plug or connector directly and pull it from the outlet.
Keep the power cord away from heated surfaces.
This appliance may only be repaired by qualified personnel; improper repair can lead to considerable danger.
Cleaning and user maintenance must not be carried out by children without supervision.
Children must be supervised to ensure that they do not play with the cooling device.
Always keep and use the appliance away from children under 8 years of age.
Do not store any explosive substances such as spray cans with a flammable propellant in the cooling device.
Avoid placing the appliance near an external heat source or direct sunlight and do not expose this appliance to rain or excessive moisture.
Close the appliance lid immediately after adding contents to maintain the internal temperature of the unit.
Do not turn the appliance upside down, on its side, or 15° or more off level.
Make sure the appliance is placed on a strong, solid, level surface on a floor or in a vehicle.
When positioning the appliance, ensure that there is at least a 6" clearance around the unit. This will allow for adequate ventilation of heat from the unit's compressor.
Do not pour water or beverages directly into the unit; use only to cool canned or bottled drinks and packaged foods.
Prior to any use, be sure that the electric supply's voltage is correct. When using outdoors, if the appliance is connected to a storage battery, the positive and negative poles must be correctly connected.
After transporting or moving the unit or for first use, please wait for a least four hours to plug in the unit.
Make sure to lock the door of the cabinet with the lock hook to avoid leaving the door ajar when the unit is running, to prevent cooling leakage and save energy.
Do not move the unit while running, and do not operate the unit on an uneven surface, which will produce vibration and noise.

Starting the unit

Important: If the unit is brought in from outside during the winter, give it a few hours to warm up to room temperature before plugging it in.

1.Remove the packaging material.
2.Clean the unit thoroughly. Wipe the outside with a soft dry cloth, the interior with a clean moist cloth.
3.Check that the voltage specification on the rating label corresponds to that of the power supply.
Connect the unit as follows:
--- Connect the DC cigarette lighter (Fig. 1) to the cigarette lighter socket in the vehicle.
---Or connect the unit via AC/DC adaptor (Fig.2) and then connect the AC power plug of the AC/DC adapter to the AC mains supply.

Fig. 1

Fig. 2

4.It is recommended to put wine, beverages, or other foods into the cooler compartment after at least two hours after the power is turned on.
Note: Because this unit can be used as a wine or beverage cooler, fresh food refrigerator, or freezer, be sure to select the proper temperature setting according to your storage needs.

Operation Panel Function

Temperature set button: " +" to increase the temperature one digit
" -" to decrease the temperature one digit;

ON/OFF button: press " ⏻" button to turn on the unit or turn off the unit;
When the unit is on, to turn off the unit, you need to press this button for more than three seconds. Otherwise, when the unit is off-state, press this button once, the unit will begin to run immediately.

Function set button: "SET" button to set the internal advanced parameter program;
Press this button for more than three seconds to enter internal parameter set program.

HH/ECO LED light: This is a two-color light, GREEN means ECO compressor running mode, and RED means HH compressor running mode.

RUN LED light: This is a two-color light; when the unit is off-state with DC power on, it will be RED, and when the unit is turned on and the compressor is running, it will be GREEN.

℃ **and** ℉ **LED light:** Temperature unit light, displaying Centigrade or Fahrenheit selected.

Temperature Digit Display Window: Use to display the cooling compartment's actual or set temperature value, and advanced parameter set value.

EUHOMY
Live the *cool life*

Operating the unit

Start the unit

Connect unit to the DC power supply; regardless of whether the unit was turned on or off when it was last supplied with DC power, the unit will turn on at once. The actual temperature in the cooling compartment will be displayed, and the compressor will start to run after a short time delay.

Note: To turn off the unit when it is on, press ⏻ button for more than three seconds. By a short press of ⏻ button, subsequently, you can turn on the unit.

Adjust the temperature setting

After starting the unit, you can set the temperature to your desired value by pressing the "+" or"-"button, the range is from -4 ℉–68 ℉. Each press of the button changes the temperature by one degree; hold down the button to change the temperature more rapidly.

Common temperature setting suggestion:

Cosmetics storage (17 ℉-68 ℉), wine (50 ℉), fruit (39 ℉-43 ℉), beverage or water (36 ℉-41 ℉), beer (32 ℉-39 ℉), meat (14 ℉), ice-cream (5 ℉), steak (0 ℉), fish (0 ℉).

For medicines, follow the manufacturer's recommendations.

When the temperature is set below 32 ℉, do not store drinks in glass bottles, such as beer or lemonade, or soda cans in the cooler as the cans or glass bottles may shatter or burst.

Advanced parameter setting

Long-press the SET button for more than three seconds: the temperature digit display window will flash to enter the advanced parameter set program:

（1）Low voltage protection battery monitor setting:

The unit is equipped with a three-level battery monitor which protects your vehicle battery against excessive discharging when the unit is connected to the on-board DC supply. This will make sure your unit works normally and protect the battery of your vehicle.

If the cooler is operated when the DC output of the vehicle cigarette lighter socket is switched off, the cooler will switch off automatically as soon as the supply voltage falls below the set level. The cooler will switch back on once the battery has been recharged to the restart voltage level.

In "H3" level, the battery monitor responds faster than at the level "H1" and "H2".

Monitor Level		H1 (LOW)	H2 (MIDDEL)	H3 (HIGH)
12V	Switch-off voltage	9.6V	10.2V	11.2V
	Restart voltage	10.9V	11.4V	12.4V
24V	Switch-off voltage	21.3V	22.3V	24.1V
	Restart voltage	22.7V	23.7V	25.2V

Suggestion:
When the cooler is supplied by the started battery of the vehicle, set the battery monitor at level H3;
If the cooler is connected to a separate supply battery or the AC/DC adapter from AC mains supply, the battery monitor level H1 will be suitable.
Because of the voltage difference of DC power output in different vehicles, if the low-voltage protection occurs and F1 displays in the temperature display window, you can adjust the monitor level to one lower level.
Note: If the cooler is still running after the vehicle engine is turned off, the protection level must be altered to H3 (high); otherwise it may consume too much electricity to start the vehicle.

Setting the protection level
The default setting of the low-voltage protection battery monitor is the H2 level. When the cooler is on, after long-pressing the SET button for more than three seconds, the last set level, H1, H2, or H3, will flash in the temperature digit display window. During flashing, touch the + or - button to select the battery monitor level H1, H2, or H3 to protect your vehicle battery. The selected monitor level will flash in the display window for a few seconds before it returns to the actual temperature display.
（2）Setting the energy saving mode
This cooler has two compressor running modes:
"HH"—normal running mode;
"ECO"—Energy-save running mode, which means the compressor will run at a lower speed and reduce energy cost.
While the above monitor level H1, H2, or H3 is flashing in the display window, short-press the SET button. The last setting of the compressor running mode, HH or ECO, will begin to flash; use the + or - button to change the compressor from HH to ECO or from ECO to HH. Set the unit to ECO mode when storing fresh food, and set the unit to HH mode for freezing or a high ambient temperature.
The selected mode HH or ECO will flash in the display window for a few seconds before it returns to the actual temperature display. The selected mode will be saved.

（3）Temperature unit change—Centigrade and Fahrenheit
While the compressor running mode HH or ECO is flashing in the display window, short-press the SET button. The temperature unit ℃ or ℉ will begin to flash; use the + or - button to change the temperature unit from ℃ to ℉ or from ℉ to ℃.
The selected temperature unit ℃ or ℉ will flash in the display window for a few seconds before it returns to the actual temperature display. The temperature unit will be saved.

（4）If no button is pressed for about 10 seconds, the unit will automatically exit the above advanced parameter set program.

Error Code Display

When the unit is running, if an ERROR code is displayed in the temperature digit display window, please refer to the following table:

Error Code	Possible Reason	Suggested Solution
F1	DC Input voltage is too low	Check the battery voltage or adjust the Battery Monitor Level.
F2	Ventilating fan fault	Check if the ventilating fan is blocked or short circuited.
F3	Compressor starting fault	Disconnect the device from the power supply for 30 minutes and restart the device.
F4	Compressor minimum running speed fault	Move the device to a place with a well-ventilated environment.
F5	Overheating warning of the driving PCB of the compressor	Move the device to a place with a well-ventilated environment.
F6	Compressor driving PCB fault	Install a new driving PCB for the compressor.
E0	The temperature sensor is short-circuited	Connect or replace the sensor.
E1	The temperature sensor is broken or disconnected	Re-connect the sensor or replace with a new sensor.
E2	Door is not closed properly, or the air circulation around the unit is blocked	Lock the door of the cabinet by checking the door lock hook. Remove the blockage around the unit.

Defrosting your unit

If you set the unit at freezing mode with a low temperature, ice will accumulate on the inner wall of the storage compartment when running the unit for a long time. When the ice is more than ¼" thick, the unit needs to be defrosted to improve its cooling efficiency. Follow the steps below to remove the ice:

Turn off the unit and disconnect the DC supply from the DC power inlet.
Remove all items from the unit.
Allow the ice to melt completely.
Drain the water by unplugging the water drain cap, then wipe the inner surfaces with a soft, dry cloth to dry the inner wall completely.
Plug into the DC supply again to turn on the unit.

WARNING: Do not use mechanical devices or other means, such as a sharp object, screwdriver, or electric hair dryer to accelerate defrosting.

Normal operating sounds and functions

It is normal to hear gurgling sounds caused by the flow of refrigerant when the compressor running.

The noise emitted by the cooling fan on the condenser is a normal function.

When not using your unit for a long period

1.Remove all items from the unit to empty the cooler.

2.Turn off the cooler.

3.Disconnect the DC power plug from the DC power inlet.

4.Leave the door open a little to prevent odor build-up.

Cleaning your unit

1.Always disconnect the DC power plug from the DC power source before cleaning.

2.Clean the inside of the unit whenever necessary, using a solution of warm water and baking soda (1 tablespoon to every 2 liters of water). Dry with a soft cloth.

3.Do not use a steel brush or harsh detergent to clean the inner liner.

4.Dirt from the condenser should be cleaned by a qualified technician if necessary.

5.Make sure that the air inlet and outlet vents on the unit are free of any dust and dirt.

Troubleshooting

Fault	Possible cause	Suggested remedy
The unit does not function, LED light does not glow.	No voltage was detected in the DC power supply.	In most vehicles the cigarette ignition port must be turned on before power is supplied to the DC power outlet.
	The fuse in the cigarette lighter or in the unit is blown.	Replace the fuse with a new one with the same electrical rating.
The unit does not cool (plug is inserted, and the operation panel displays normally).	Defective compressor or refrigerant leakage.	Check the compressor is running. This may only be repaired by an authorized repair center.
The unit does not cool (plug is inserted, display screen shows Error Code F1).	Low voltage protection battery monitor is set too high.	Set the battery monitor to a lower level.
	Battery voltage is too low.	Test the battery and charge it if Needed.
The display screen shows an Error Code, and the unit does not cool.Please refer to above section "ERROR CODE DISPLAY"	Please see the above explanation in the section "ERROR CODE DISPLAY"	This should only be repaired by an authorized repair center or a professional.
The compressor runs, but the inner liner does not get very cold.	The ambient temperature is too high.	Wait for the unit to cool down; it may be necessary to move the unit to a better environment.
	The cooling system is blocked or refrigerant is leaking.	Contact service department or a professional.
The inner liner is very cold and the compressor runs continu-ously.	The ice or frost on the liner wall is too thick.	Start the defrosting process.
	The door is not closed properly or opened too frequently.	The door should be closed as much as possible and not opened too often.
	The condenser is not well-ventilated.	Place the unit where there is good air circulation.
	The set temperature is too low.	Set the temperature to a higher value.
The unit is noisy.	The unit is not level.	Place the unit on a flat, firm surface.
	The DC power voltage is not in the correct range.	Run the unit at normal DC power.

I Warranty

The manufacturer provides a warranty in accordance with the legislation of the customer's country of residence, for a minimum of one year, starting from the date on which the appliance is sold to the end user.

The warranty only covers defects in material or workmanship.

The repairs under warranty may only be carried out by an authorized service center. When making a claim under the warranty, the original bill of purchase (with purchase date) must be submitted.

The warranty will not apply in cases of:

- Normal wear and tear
- Incorrect use, e.g., overloading the appliance, use of non-approved accessories
- Use of force, damage caused by external influences
- Damage caused by non-observance of the user manual, e.g., connection to an unsuitable power supply or non-compliance with the installation instructions
- Partially or completely dismantled appliances

EUHOMY

Live the *cool life*

Email: support@euhomy.com

Facebook: @Euhomy.Official