EUHOMY

IM022-L
CRESCENT ICE MAKER

User Manual

SKU: IM022-LBS-USEH

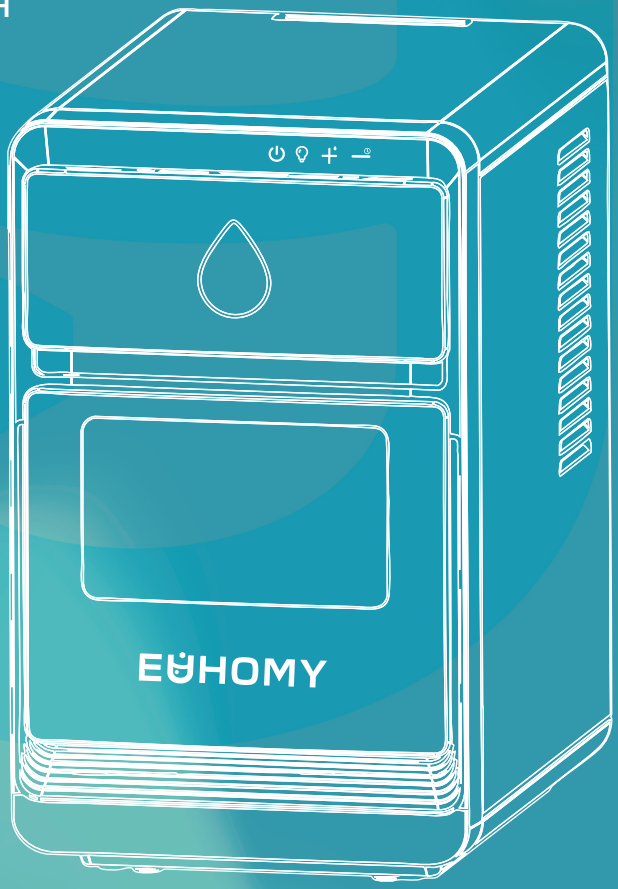

support@euhomy.com

https://euhomy.com

THANK YOU

for purchasing the Euhomy ice maker

Scan the QR code using a mobile device

ACTIVATE YOUR WARRANTY

https://euhomy.com/pages/activate-warranty

RECORD THIS INFORMATION

Model Number *IM022-L*

Serial Number _____

Date of Purchase _____

Store of Purchase _____
(Keep receipt)

TIP

Check the back or side of the machine for the serial number on the nameplate.

For car refrigerators, it's usually on the bottom or side. If you can't find it, don't worry — it won't affect your warranty registration.

CUSTOMER SERVICE

1-833-362-2655

support@euhomy.com

https://euhomy.com

JOIN US

euhomyofficial

EuhomyOfficial

euhomy_us

euhomy

SCAN HERE to share tips, get support,and connect with fellow enthusiasts!

Contents

Important Safety Instructions	01
Components and Structure	04
Control Panel and Display Overview	05
Installation Guide	08
First-time Cleaning	10
Operate the Ice Maker	11
Cleaning Methods	15
Storage and Relocation	17
Troubleshooting	18
Specs	20
Voltage Reference	21
Warranty Policy	22

IMPORTANT SAFETY INSTRUCTIONS

Read and review instructions to understand the operation and use of the product.

Indicates the presence of a hazard that can cause personal injury, death, or substantial property damage if the warning included with this symbol is ignored.

Avoid contact with hot surfaces. Always use hand protection to avoid burns.

For indoor and household use only.

⚠ WARNINGS

Failure to follow these instructions could result in electric shock, fire or burn hazard, which could cause property damage, personal injury, or death. When using electrical appliances, basic safety precautions should always be followed, including the following:

1. This appliance can be used by persons with reduced physical, sensory, or mental capabilities or lack of experience and knowledge if they have been given supervision or instruction concerning the use of the appliance in a safe way and understand the hazards involved.

2. Keep the appliance and its cord out of reach of children. **DO NOT** allow the appliance to be used by children. Close supervision is necessary when used near children.

3. Children should not play with the appliance.

4. Cleaning and user maintenance should not be carried out by children.

5. The ice maker must be installed according to the installation instructions provided before use. Ensure the appliance is placed on a stable, leveled surface. **DO NOT** place or store anything on top of the product when in use.

6. To prevent fire, **DO NOT** place the appliance on or near a gas or electric cooktop.

7. **DO NOT** use the appliance outdoors or expose it to direct sunlight. Maintain at least 25 cm of clearance at the back of the appliance for proper ventilation.

8. Tipping the appliance may cause abnormal noise, water leakage, or improper ice production.

9. **DO NOT** use an extension cord. A short power-supply cord is used to reduce the risk of children under 8 years grabbing the cord or becoming entangled and to reduce the risk of people tripping over a longer cord. Additionally, using extension cords is not recommended, as it may cause overheating and fire hazards.

10. To protect against electrical shock, **DO NOT** immerse the cord, plugs, or main unit housing in water or other liquid.

11. If the supply cord is damaged, it must be replaced by the manufacturer, its service agent, or a similarly qualified person to avoid a hazard.

12. This appliance must be earthed and connected to the power supply according to the nameplate.

13. Regularly inspect the appliance and power cord. **DO NOT** use the appliance if there is damage to the power cord or plug. If the appliance malfunctions or is damaged in any way, immediately stop use and call Customer Service.

14. Disconnect the appliance from the power supply when not in use for an extended period or before cleaning and servicing.

15. **ALWAYS** ensure the appliance is correctly assembled before use.

16. This appliance is for household use only. **DO NOT** use this appliance for anything other than its intended use. **DO NOT** use it in moving vehicles or boats. **DO NOT** use it outdoors. Misuse may cause injury.

17. To disconnect, turn any control to OFF, then unplug it from the socket when not in use and before cleaning. Allow the appliance to cool before cleaning, disassembly, putting in or taking off parts, and storing it.

18. Use only water to make ice cubes. **DO NOT** use any other liquids.

19. **DO NOT** clean the appliance with flammable fluids, as fumes may create a fire or explosion hazard.

20. **DO NOT** damage the refrigerant circuit. If the refrigerant tubing is punctured, consult factory-authorized personnel for servicing.

21. **DO NOT** store explosive substances, such as aerosol cans with flammable propellant, in or near the appliance.

22. Please refer to the Cleaning & Maintenance section for regular maintenance of the appliance.

23. If the appliance requires servicing, consult a certified technician. **DO NOT** attempt to repair it yourself.

24. If the appliance is brought indoors from cold weather, allow it to warm to room temperature for several hours before plugging it in.

25. Keep ventilation openings in the appliance enclosure or built-in structure free of obstruction.

⚠Risk of Fire or Explosion-Flammable Refrigerant Used

Dispose of the appliance following federal or local regulations. Follow all handling instructions to ensure safe disposal.

DO NOT use mechanical devices to defrost the ice maker.

DO NOT puncture refrigerant tubing.

Servicing must be performed by trained personnel only.

The ice maker should comply with the safety standards for refrigeration systems (ASHRAE15) and should not be installed in corridors or hallways of public buildings.

Clean and maintain the appliance regularly according to the Cleaning & Maintenance section of this manual.

SCAN HERE to watch the installation, usage, cleaning videos and more information.

KEY COMPONENTS AND STRUCTURE

① **Drip Tray**
② **Ice Bin Door**
③ **Ice Bin**
④ **Reservoir**
⑤ **Reservoir Main Lid**
⑥ **Reservoir Refill Cap**
⑦ **Control and Display Area**
⑧ **Top Cover**
⑨ **Air Outlet**
⑩ **Drain Plug**

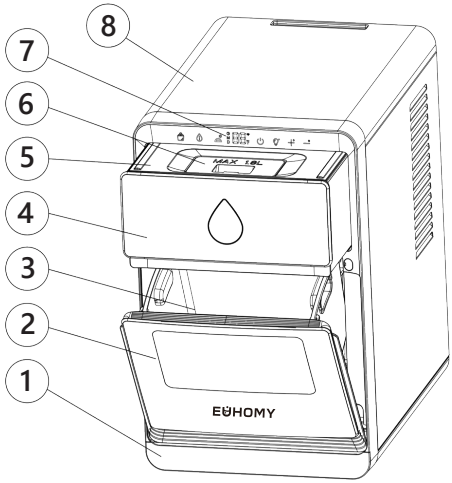

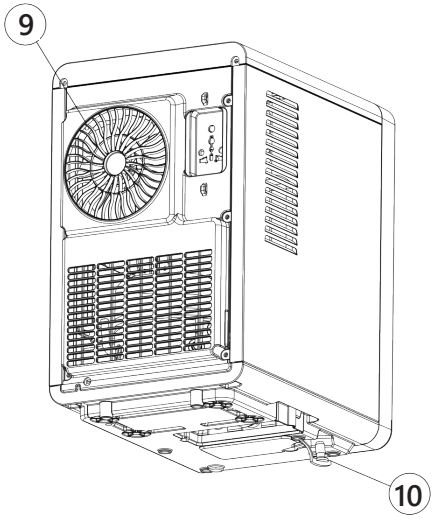

Accessories

- 1 x Ice Scoop

CONTROL PANEL AND DISPLAY OVERVIEW

Control Panel Overview

ON/OFF Button

- Press this button to start or stop the ice-making process.
- During the ice-making process, pressing this button will turn off the machine and switch it to standby mode.
- When the machine is in the self-cleaning cycle, pressing this button will stop the ongoing self-cleaning process.
- When the machine's timer feature is enabled for scheduled power on/off, pressing this button will cancel the scheduled timer by turning the machine on or off directly.
- During the ice-making process, press and hold this button for more than 3 seconds to initiate the defrosting process, which helps remove ice buildup from the evaporator.

Light / Ice Thickness Adjustment Button

- Press this button to turn the machine's internal light on or off. The 3 different light colors indicate the machine's current operating status:
  - **Blue light**: The machine is in ice-making mode, and everything is operating normally.
  - **Purple light**: The ice bin is full, and some ice needs to be removed.
  - **Orange-red light**: The machine is low on water, and water needs to be added to the reservoir.
- Press and hold this button for more than 3 seconds to enter the ice thickness adjustment mode. Use the + and − buttons to adjust the thickness of the ice.

Increase / Self-cleaning Button

- This button is used to adjust the timer and ice thickness settings.
  - **Timer Adjustment**: Each press increases the timer by 1 hour, with a maximum setting of 24 hours.
  - **Ice Thickness Adjustment**: Each press increases the ice-making time by 1 minute, and the ice thickness will correspondingly increase. The ice thickness can be adjusted up to **"5"**.
- Press and hold this button for more than 3 seconds to enter the self-cleaning mode.

Decrease / Timer Button

This button is used to adjust the timer and ice thickness settings.

- **Timer Adjustment**: Each press decreases the timer by 1 hour, with a minimum setting of 0 hours (which cancels the timer).
- **Ice Thickness Adjustment**: Each press decreases the ice-making time by 1 minute, and the ice thickness will correspondingly decrease. The ice thickness can be adjusted up to**"-5"**.

Press and hold this button for more than 3 seconds to enter the timer settings.

Display Panel Overview

Ice Full Indicator

When this indicator is lit, it means the ice bin is full, and the machine will stop making ice. After removing the ice, the machine will resume the ice-making process. Under normal conditions, the ice bin can hold up to 1kg (about 2.2lbs) of ice (approximately 10 cycles of ice). When the ice bin is full, the internal light of the ice maker will turn purple.

Low Water Indicator

When this indicator is lit, it means the reservoir is low on water, and the machine will stop making ice. Ice-making will resume only after sufficient water is added to the reservoir.
When this indicator is flashing, it means the defrosting process has timed out or failed. A forced defrost is required (press and hold the **ON/OFF** button for approximately 3 seconds or more).

Ice Making Indicator

When this indicator is lit, it means the machine is in ice-making mode.
When this indicator is flashing, it means the machine is in the defrosting process.

Timer Indicator

The machine has a scheduled power on/off program set when this indicator is lit.

- **In standby mode:** Press and hold the button for more than 3 seconds. When this indicator and the numbers start flashing simultaneously, it means the machine has entered the scheduled power-on program. The number displayed indicates how many hours later the machine will automatically power on and start making ice.
- **In power-on mode:** Press and hold the button for more than 3 seconds. When this indicator and the numbers start flashing simultaneously, it means the machine has entered the scheduled power-off program. The number displayed indicates how many hours later the machine will automatically stop making ice and power off.

M Indicator

- When the **"M"** indicator is on, the digital display number represents the remaining time in the current ice-making cycle. For example, when both the **"M"** and **"8"** lights are on, the machine will finish making ice and start the defrosting in 8 minutes.

D Indicator

When the **"D"** indicator is on, the number displayed in the digital display represents the current ice thickness setting:

- If **"D"** and **"3"** are displayed, it means the ice-making time for one cycle is increased by 3 minutes, and the resulting ice will be thicker.
- If **"D"** and **"-2"** are displayed, it means the ice-making time for one cycle is reduced by 2 minutes, and the resulting ice will be thinner.

Number Display

The digital display will show corresponding information based on the status of the indicator lights:

- When the **"M"** or **"D"** indicators are on, the digital display will show the ice-making countdown or the ice thickness setting, respectively.
- If no indicator is on and the digital display is flashing, it indicates the countdown for the cleaning process. For example, when the digital display shows **"20"** and flashes, it means the self-cleaning process will be completed in 20 minutes.

INSTALLATION GUIDE

1. Unpack and Inspect

Remove all external and internal packaging, including the carton, foam padding, and the protective foam inside the machine. Check if all accessories are included, such as the ice scoop. If anything is missing, please contact Euhomy Customer Service (email **support@euhomy.com** or call us at **+1-833-362-2655**).

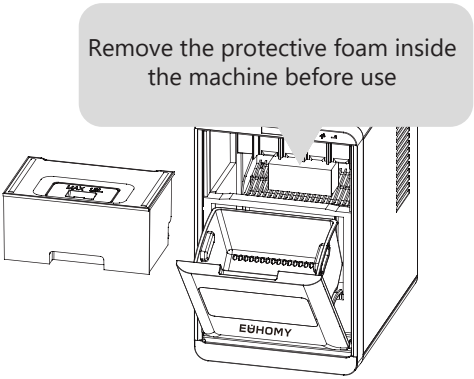

2. Prepare the Ice Maker

Remove all tape securing the door, inner cabinet, and ice scoop. Use a damp cloth to clean the inner cabinet and ice scoop.

3. Place the Ice Maker

Place the machine in a well-ventilated area with a relatively low ambient temperature. Position it on a flat surface away from direct sunlight and heat sources (e.g., stove, oven, heater). Ensure there is at least **25 cm (about 10 inches)** of clearance around the air outlet and at least **10 cm (about 4 inches)** of clearance on both sides of the machine from any obstructions.

4. Let the Refrigerant Settle

If the equipment was tilted during transport, place it upright and allow it to stand for **24 hours** before plugging it in and using it to let the refrigerant settle.

5. Ensure Plug Accessibility

Place the machine in a position where the plug can be easily accessed. The machine must be grounded for safety.

IMPORTANT SAFETY WARNINGS

THIS UNIT MUST BE GROUNDED

- For safety, the appliance must be grounded. Use the supplied grounding plug and plug into a compatible grounded outlet. If one is unavailable, contact a qualified electrician to install it.
- Plug into a grounded outlet; never remove the ground prong.
- Do not use an adapter or extension cord. Failure to follow these instructions may cause fire, shock, or death.

ELECTRICAL CONNECTION

- Ensure a dedicated circuit for the ice maker.
- Use outlets not controlled by a switch.
- For replacement of power cord or plug, contact a qualified technician.

CLEANING YOUR ICE MAKER BEFORE USING FOR THE FIRST TIME

We prioritize the hygiene of the ice you use. Before using the machine for the first time, please be sure to clean all parts that come into contact with water.

1.With the power off, use a dry cloth to clean the exterior of the ice maker.

2.Remove the water reservoir and ice bin, then clean them with warm water, a soft cloth, and a mild detergent. We **strongly** recommend using our ice maker-specific cleaner.

3.Clean all internal components that come into contact with water.

4.Ensure the machine is in standby mode, then remove the drain plug to drain the water from both the reservoir and the interior tank.

5.Once the draining is complete, reinstall the drain plug.

6.Run 1-2 ice-making cycles with water, discarding all ice and water to ensure a thorough cleaning.

TIP

Please use potable water, preferably purified bottled or filtered water. The quality of the water directly impacts the clarity of the ice and the lifespan of the ice maker.

HOW TO OPERATE THE ICE MAKER

1. Fill the Reservoir

Remove the reservoir, open the water refill cap, and pour in purified water (up to a maximum of 1.8L/0.475 gallons). Close the refill cap, then slide the reservoir back into the machine as shown in the image below :

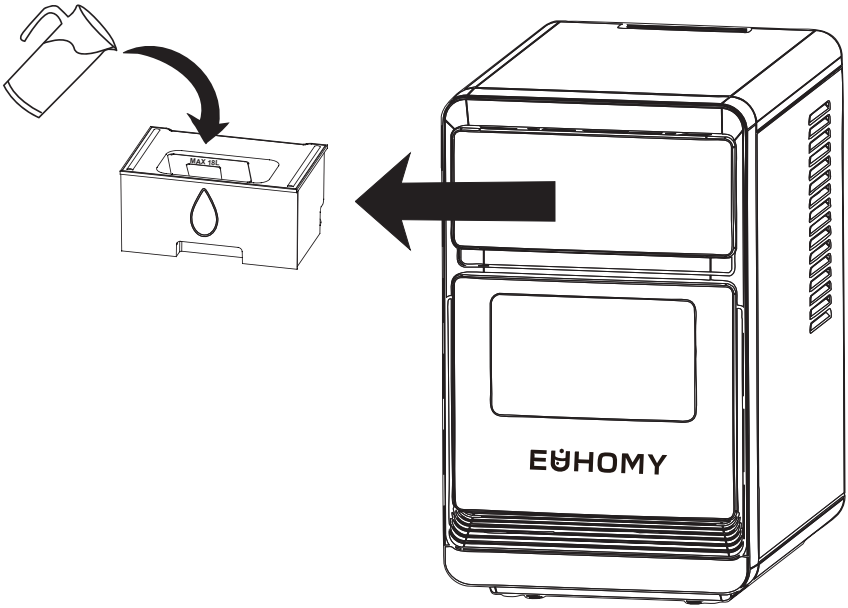

NOTE

Be sure to push the water reservoir into its designated position. If it is not properly placed, the machine will not function correctly due to a lack of water.
Use potable water, preferably purified bottled or filtered water. The water quality will directly impact the ice's clarity and the machine's lifespan. Any unusual sounds during the water pump operation are caused by impurities in the water and are normal, without affecting the machine's performance.

2. Ice Making Process

Start Ice Making

Plug in the power cord, and the four buttons will light up. Press the button on the control panel to start the machine. The machine will first enter the defrosting process. The symbol will blink, and after a few minutes, the defrosting will end. The symbol will remain lit, indicating the machine is entering the ice-making process

Remaining Time Display

When the **"M"** indicator is on, the number displayed in the digital display represents the remaining time of the current ice-making cycle. For example, when the **"M"** and the number **"8"** are displayed, the machine will complete ice-making in 8 minutes and begin the defrosting process.

Ice Thickness Adjustment

When the ice thickness is not ideal, press and hold the button for more than 3 seconds to activate the **"D"** indicator. The digits will flash, and you will enter the ice thickness adjustment setting. Use the and buttons to adjust the ice thickness:

• To make the ice thicker: Each press of the button will increase the ice-making time by 1 minute, and the ice thickness will correspondingly increase. The ice thickness can be adjusted up to **"5"**.

• To make the ice thinner: Each press of the button will decrease the ice-making time by 1 minute, and the ice thickness will correspondingly decrease. The ice thickness can be adjusted up to **"-5"**.

If no operation is made for 5 seconds, the current settings will be saved automatically, and the machine will exit the ice thickness adjustment mode. To adjust again, repeat the above steps.

Changing the ice thickness during the ice-making process will not affect the current batch; the new setting will take effect from the next batch.

If the machine loses power, it will revert to the default setting of **"0"**.

Ice Full

When the symbol lights up, the ice maker will stop working. After removing the ice, the machine will resume operation.

NOTE

A typical ice-making cycle lasts 10-25 minutes, depending on environmental temperature and water temperature. The first ice-making cycle may take longer due to the higher water temperature in the reservoir. However, the ice-making cycle will generally not exceed 45 minutes.

Turn Off Ice Making

- During the ice-making process, press the button on the control panel to turn off the machine and enter standby mode.
- You can also use the scheduled power-off function. Press and hold the button for over 3 seconds to enter the timer setting mode, and use the and buttons. For example, When the and the number "3" flash, it means the machine will automatically turn off after 3 hours.

Forced Defrost or Removing Ice from the Evaporator

During the ice-making process, press and hold the button for more than 3 seconds. The machine will directly enter the defrosting process. This feature helps remove ice build-up from the evaporator.

3. Scheduled On/Off Settings

The machine can be set to automatically start when in standby mode or to automatically shut off during the ice-making process.

Range: 1-24 hours

Timer Setting

- In standby mode, press and hold the button for more than 3 seconds. The display will show and the timer time "1".
- Use the and buttons to adjust the timer. Each press of the button increases the time by 1 hour, while the button decreases the time.
- During the adjustment, the timer symbol will blink. Once the setting is completed, it will stay on for 5 seconds and then remain solid.

Scheduled On Display (Standby Mode)

- In standby mode, if the display shows ⏲ and “5”, this means the machine will automatically start in 5 hours.

Scheduled Off Display (Ice-Making Mode)

- During ice-making, the ⏲ symbol will remain lit to indicate that a scheduled off time has been set.
- To view the scheduled off time, press and hold the ⏲ button for over 3 seconds. If the display shows ⏲ and **“5”**, this means the machine will automatically turn off after 5 hours.

Canceling Scheduled Timer

- When a timer is set, you can use the following three methods to cancel it:
  Method 1
  Press and hold the ⏲ button for more than 3 seconds. The display will blink with the ⏲ symbol and a number. Then, press and hold the ⏲ button for 3+ seconds to cancel the timer.
  Method 2
  Set the timer to **“0”** and wait for 5 seconds. The timer will be canceled automatically.
  Method 3
  Press the ⏻ button to forcibly turn off the timer function, which will immediately turn the machine on or off.

4. Self-Cleaning

Default Cleaning Time: 20 minutes

Entering Self-Cleaning Mode

- Make sure the reservoir is full and the machine is plugged in.
- Press and hold the + button for 3+ seconds to start the self-cleaning process.
- The display will show **“20”**, indicating that the self-cleaning process will end in 20 minutes.

Canceling Self-Cleaning

- Once the self-cleaning process is complete, the system will automatically shut down.
- If you need to stop the self-cleaning process before it is complete, you can press the ⏻ button on the control panel to force the cancellation of the self-cleaning program.

CLEAN YOUR ICE MAKER

1. Daily Cleaning

- Follow the automatic self-cleaning program mentioned earlier for daily cleaning.
- You can also use a mild detergent, warm water, and a soft cloth for wiping.

2. Deep Cleaning

Clean every component that comes into contact with water, especially the water distribution tube. Below are the detailed steps for cleaning:

Note

Before cleaning, make sure to disconnect the power and drain all water from the machine's interior and the water tank.

Remove the Top Cover

Use tools to remove the two screws on the top back of the machine. Press the top cover with your hand and slide it backward, then place it aside, as shown in the first image.

Disconnect the Silicone Tubes

After removing the top cover, disconnect the three small silicone tubes from the water distribution tube, as shown in the second image.

Remove the Water Distribution Tube

Press the clip next to the water distribution tube backward, then pull the tube upward and diagonally out, as shown in the third image.

Clean the Water Distribution Tube

After removing the distribution tube, carefully clean the inside, paying particular attention to each small hole to ensure they are clear and unobstructed.
Also, clean the water distribution basin to ensure no debris is left behind, as shown in the fourth image.

By regularly cleaning the water distribution tube and the basin, you can ensure smooth water flow, maintain the cleanliness of the ice maker, prevent blockages, and extend the machine's lifespan.

We recommend performing the self-cleaning function at least **once a week**. Additionally, a thorough cleaning of all water-contact components, including the reservoir, ice bin, evaporator, and others, should be done **every six months.**

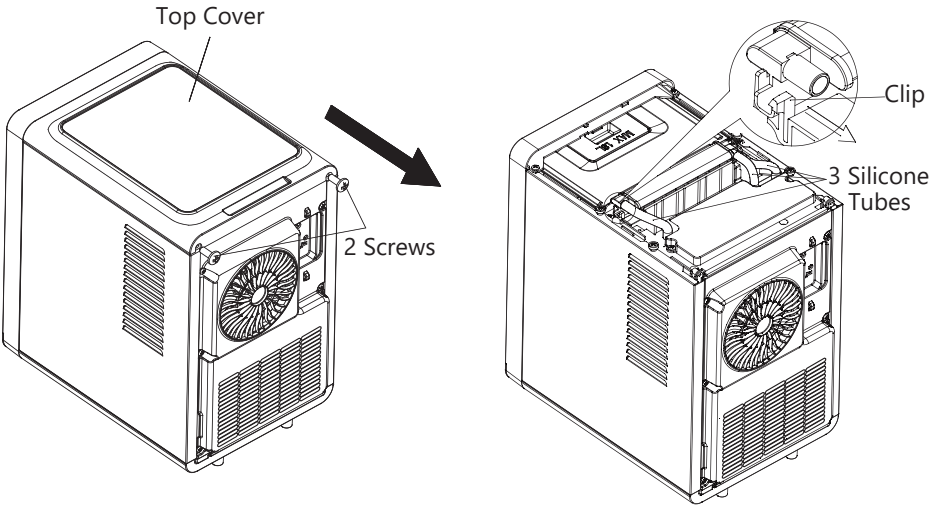
Top Cover
2 Screws
Clip
3 Silicone
Tubes

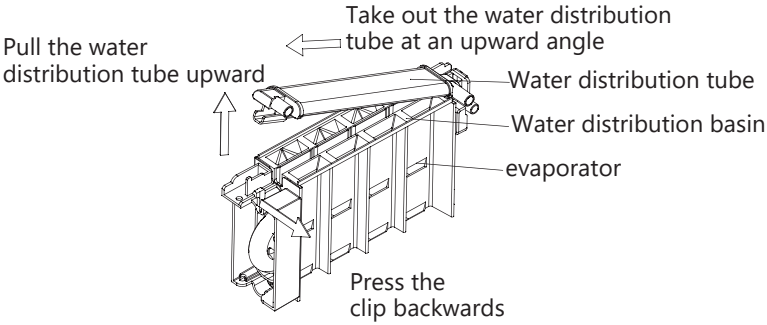
Take out the water distribution
tube at an upward angle
Pull the water
distribution tube upward
Water distribution tube
Water distribution basin
evaporator
Press the
clip backwards

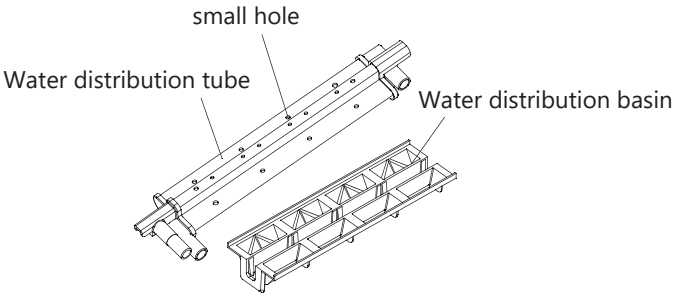
small hole
Water distribution tube
Water distribution basin

PREPARING YOUR ICE MAKER FOR LONG-TERM STORAGE OR RELOCATION

If your ice maker will be unused for an extended period or needs to be relocated, it must be properly prepared for storage. Please follow the steps below:

Step 1: Cleaning and Maintenance

Unplug the machine: Always unplug the ice maker before cleaning.
Empty the contents: Remove the ice bin and drain the reservoir.
Avoid harsh chemicals: Do not use alcohol or abrasive cleaners, as they can damage the machine.
Clean the condenser coils: Clean the condenser coils at least once a year to ensure optimal performance.

Step 2: Drain All Water

Turn off the power: Unplug the ice maker.
Drain the water tank: Open the reservoir main lid and drain it completely. Allow air to circulate and ensure it is fully dry inside before closing the lid.
Empty the drip tray: Pour out any water in the drip tray.
Open the door: Remove the ice bin and leave the ice bin door open to allow air circulation and prevent mold growth.

Step 3: Proper Storage

Ensure complete dryness: Ensure the ice maker is completely dry before storing it.
Cover it: Use a plastic bag to cover the ice maker to keep out dust.

Note: If the ice maker has been idle for a long time, please clean it thoroughly before using it again.

	When the unit is taken out of service, its disposal and the handling of its materials must comply with national regulations.

TROUBLESHOOTING

Problem	Possible Cause	Solution
indicator is on.	The reservoir is not pushed into the designated position.	Push the reservoir into the designated position.
	The float of the level switch is stuck and unable to rise.	Clean the reservoir and the level switch.
	The drain plug at the bottom of the machine is not securely closed.	Securely close the drainage plug.
indicator is on.	The ice bin is overloaded and full.	Remove some ice from the ice bin.
	Ice full sensor malfunction.	After starting the ice-making process, press and hold the button for more than 3 seconds to force continuous ice-making for 15 cycles. After 15 cycles, it will automatically stop. To continue the ice-making process, repeat this operation. If the issue persists, professional repair is required.
indicator is flashing.	The hole in the water distribution pipe is clogged.	Clean the water distribution pipe as per the instructions in the manual.
	Ice melt pump malfunction.	Power cycle the machine. If the issue persists, contact a professional technician to replace the water pump.
The water pump works, but no water flows from the distribution pipe.	The water beneath the ice bin has turned into slush.	The machine can continue operating and will automatically recover.
	The hole in the water distribution pipe is clogged.	Clean the water distribution pipe as per the instructions in the manual.
The ice cubes have poor transparency.	The water quality used for ice making is poor.	Use purified water or filter and soften the water before use. However, please don't pour hot water into the machine.
Less than 16 ice cubes are produced per cycle.	The hole in the water distribution pipe is clogged.	Clean the water distribution pipe as per the manual instructions.
	One of the ice-making water pumps is faulty.	The machine can still be used, or you can contact a professional technician to replace the water pump.
The ice cubes are incomplete or irregularly shaped.	The water quality used for ice making is poor.	Use purified water or filter and soften the water before use.
	The hole in the water distribution pipe/basin is clogged.	Clean the water distribution pipe/basin as per the manual instructions.

The ice cubes are too thin.	The ambient temperature is too high, or the ice thickness setting is too thin.	Move the machine to a cooler location and increase the ice thickness setting.
	Poor ventilation.	Adjust or relocate the machine. Ensure that there is at least **25 cm (about 10 inches)** of clearance between the air outlet and any obstructions and at least **10 cm (about 4 inches)** of clearance on both sides of the machine.
The ice cubes are too thick.	The ambient temperature is too low, or the ice thickness setting is too thick.	Decrease the ice thickness setting.
The screen displays *"E"*	The ambient temperature is too high, or the water temperature in the reservoir is too high.	Move the machine to a location with an ambient temperature below 32°C, and use purified or filtered water with a lower temperature.
	The water level beneath the ice bin is too high.	Open the drain plug to drain the water beneath the ice bin. Ensure the water level does not exceed the bottom of the ice bin, then restart the machine.
	Refrigerant leakage.	Professional repair is required.
	There is an issue with the cooling system.	Professional repair is required.
The screen displays *"E1"*	The ambient temperature sensor is damaged.	The machine can continue operating, but ice-making efficiency and performance may be affected. If necessary, please have a professional technician replace the component.
The screen displays *"E2"*	The water temperature sensor is damaged.	The machine can continue operating, but the ice-making efficiency and quality may be affected. If needed, please have a professional technician replace the part.

For further support, feel free to reach out to the Euhomy support team!

1-833-362-2655

support@euhomy.com

https://euhomy.com

SPECS

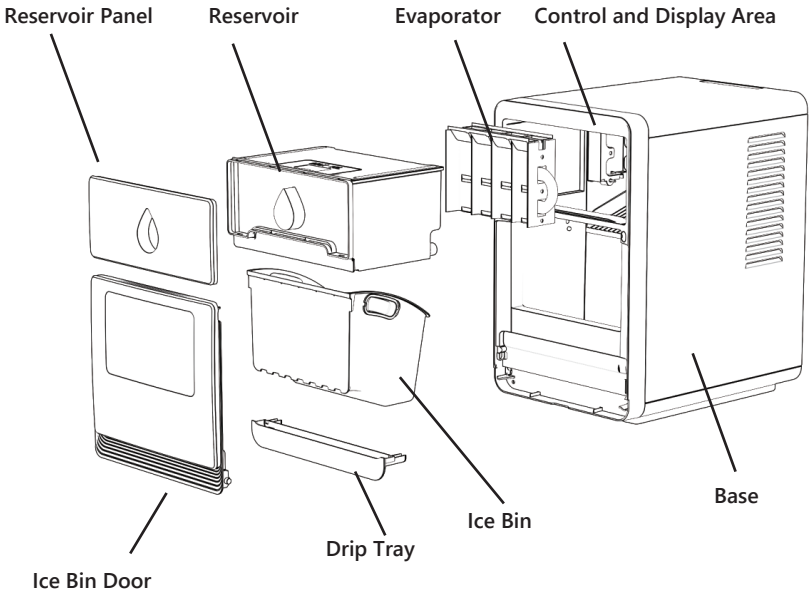

Specification	Value
Model	IM022-L
Factory Model	HZB-10M
Ice Type	Crescent Ice
Refrigerant	R290
Voltage/Frequency	110~120V/60HZ
Ice Production Capacity	10kg/24H
Ice Production Per Cycle	16 cubes
Ice Bin Capacity	1kg
Reservoir Capacity	1.8L
Rated Ice Making Power/Current	195W/2.2A
Rated Ice Melting Power/Current	210W/2.5A
Product Dimensions	250*382*420mm
Packaging Dimensions	296*455*482mm
Net/Gross Weight	11/12kg

VOLTAGE REFERENCE

Country/Region	Voltage	Frequency
the United States	110~120V	60HZ
Canada	110~120V	60HZ
United Kingdom	220~240V	50HZ
Germany	220~240V	50HZ
France	220~240V	50HZ
Netherlands	220~240V	50HZ
Sweden	220~240V	50HZ
Poland	220~240V	50HZ
Austria	220~240V	50HZ
Romania	220~240V	50HZ
Belgium	220~240V	50HZ
Slovenia	220~240V	50HZ
Italy	220~240V	50HZ
Spain	220~240V	50HZ
Greece	220~240V	50HZ
Czech Republic	220~240V	50HZ
Hungary	220~240V	50HZ
Chile	220~240V	50HZ
Croatia	220~240V	50HZ
Luxembourg	220~240V	50HZ
Republika Hrvatska	220~240V	50HZ
Switzerland	220~240V	50HZ
Finland	220~240V	50HZ
Japan	100V	50~60HZ

WARRANTY POLICY

Euhomy is dedicated to delivering top-notch products and outstanding customer service. We back our products 100% and are here to support you every step of the way.

To activate your warranty, please visit ***https://euhomy.com***
To request customer service, feel free to contact us anytime!

For further support, feel free to reach out to the Euhomy support team!

1-833-362-2655 | support@euhomy.com | https://euhomy.com

Business Time: Mon to Fri, 9 AM- 6 PM (ET)

Euhomy 1-Year Limited Warranty

The One-Year (1) Limited Warranty is valid for purchases from this website or official Euhomy purchase channels such as Amazon, TikTok, and Walmart. It covers the original owner and product only, and it isn't transferable. For purchases made through unauthorized resellers, we recommend you contact them directly. Euhomy guarantees the unit is free of material and workmanship defects for one year from the purchase date, as long as it's used under normal household conditions and maintained per the User Manual. This is subject to certain conditions and exclusions as follows:

What is covered?

If the original unit or non-wearable parts are found defective, as determined by Euhomy, we will arrange repair or replace it within one year from the purchase date. If you receive a replacement unit, the warranty lasts for the remainder of the original warranty.

What is not covered?

(a) Normal wear and tear on the unit or parts, as well as any parts lost or damaged due to human factors after delivery; replacement parts are available for purchase. Feel free to contact us using the methods provided below.

(b) Damage from misuse, mishandling, accidents, or not following the operating instructions.

(c) Damage caused by exposure to liquids other than water or foreign substances.

(d) Repairs or modifications not performed by Euhomy.

(e) Use in commercial settings or non-household environments (except for commercial models).

How to get service?

If your appliance isn't working properly or if you need any assistance, we offer several ways for you to get in touch with us.

You can reach us by calling **1-833-362-2655** or emailing **support@euhomy.com** directly. For specific product categories, we also offer potential upgrades to enhance your warranty to our VIP service.Our phone lines are open from **Mon to Fri, 9 AM - 6 PM (ET)**, and we normally respond to emails and forms within **24 business hours**. To help us assist you better, we recommend that you register your product online at **1-833-362-2655** and have the appliance with you when you call us. If you reach out via email, sometimes our emails might end up in your spam folder, so please check there to make sure you don’t miss our response. The proof of purchase will be needed when you request a warranty service.In addition to our one-year warranty, we offer lifetime technical support. After the warranty expires, you can arrange for service at an additional cost.

Feel free to contact us anytime with any issues.

EUHOMY

Live the *cool life*

support@euhomy.com

https://euhomy.com